ADVANCED REACTOR, FUEL CYCLE, AND ENERGY PRODUCTS WORKSHOP FOR UNIVERSITIES

Dr. Paul Pickard

Energy Conversion

Sandia National Laboratory

Workshop for Universities
Hilton Hotel, Gaithersburg, MD
March 4, 2004

GEN IV ENERGY CONVERSION RESEARCH AREA INCLUDES

- **Development of advanced power conversion options for Gen IV**
  - **Higher efficiency, lower cost**
  - **Optimal coupling to Gen IV output characteristics**

  Cost ($/kW-hr) = (Capital cost recovery + Operating costs)/Electrical Output
- **Compare increased efficiency potential with capital cost impact**
- **Study Areas**
  - **Intermediate temperature systems -- Supercritical CO2 Cycle**
    - **GFR, LFR, SFR, MSR (550 -700 C)**
  - **Very high temperature systems – He Brayton Cycles**
    - **VHTR (1000 C)**

GEN IV ENERGY CONVERSION RESEARCH AREA INCLUDES

- **Supercritical CO_2 Brayton cycles ~550-700 C. (GFR, LFR, SFR, MSR) -- MIT**
  - System and turbo machinery design
  - Cost assessment
  - Lab scale experiment design
- **High-temperature He Brayton cycle options for improved efficiency. ~1000 C (VHTR) -- SNL**
  - Cycle efficiency analysis
  - Preliminary cost analysis
- **NGNP power conversion technology options assessment (FY04)**

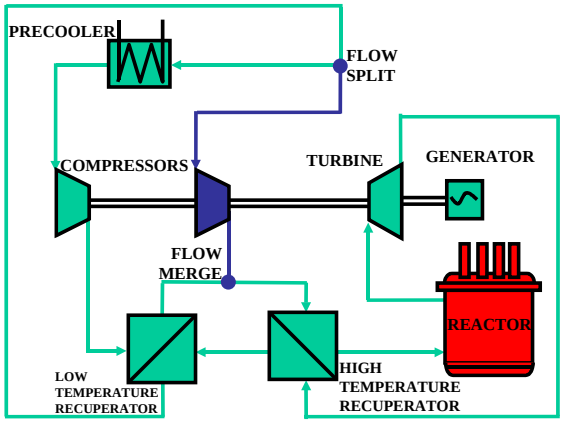

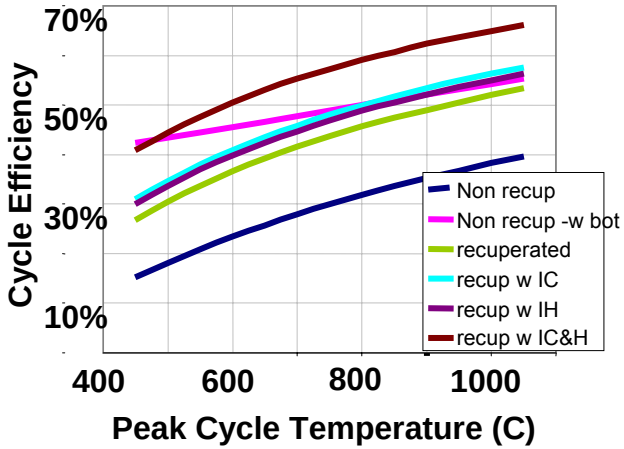

FY03 ACCOMPLISHMENTS - SUPERCRITICAL CO2

MIT Supercritical CO2 Study initiated in FY2003

- Investigators (MIT)
  - **Principal Investigator -- M. Driscoll**
  - **V. Dostal, P. Hejzlar (system analysis)**
  - **Yong (Jeff) Wang (turbomachinery design)**

- Topical report -- "*A Supercritical Carbon Doxide Cycle for Next Generation Nuclear Reactors*", (V. Dostal, P. Hejzlar, M.J. Driscoll), MIT-ANP-TR-100, Feb. 2004

FY03 ACCOMPLISHMENTS - S-CO2

- **S-CO2 Cycle Advantages**
- Potential for 44% thermal efficiency at 550°C turbine inlet temperature.
  - **Materials demonstrated in British AGRs (14) -- operated more than 15 years using CO_2 at 650°C.**
- Lower compressor work
  - **Compression of high density CO_2 fluid near the critical point (7.3 MPa, 31°C), reduces compressor work**
- Turbo-machinery
  - **High pressure, high density gas allows smaller turbine – compressor sizes**
- Indirect cycle applicable to GFR, LFR, SFR, MSR

FY03 ACCOMPLISHMENTS - S-CO2

S-CO2 turbine size comparison

Steam, inert gas, CO2 turbine sizes

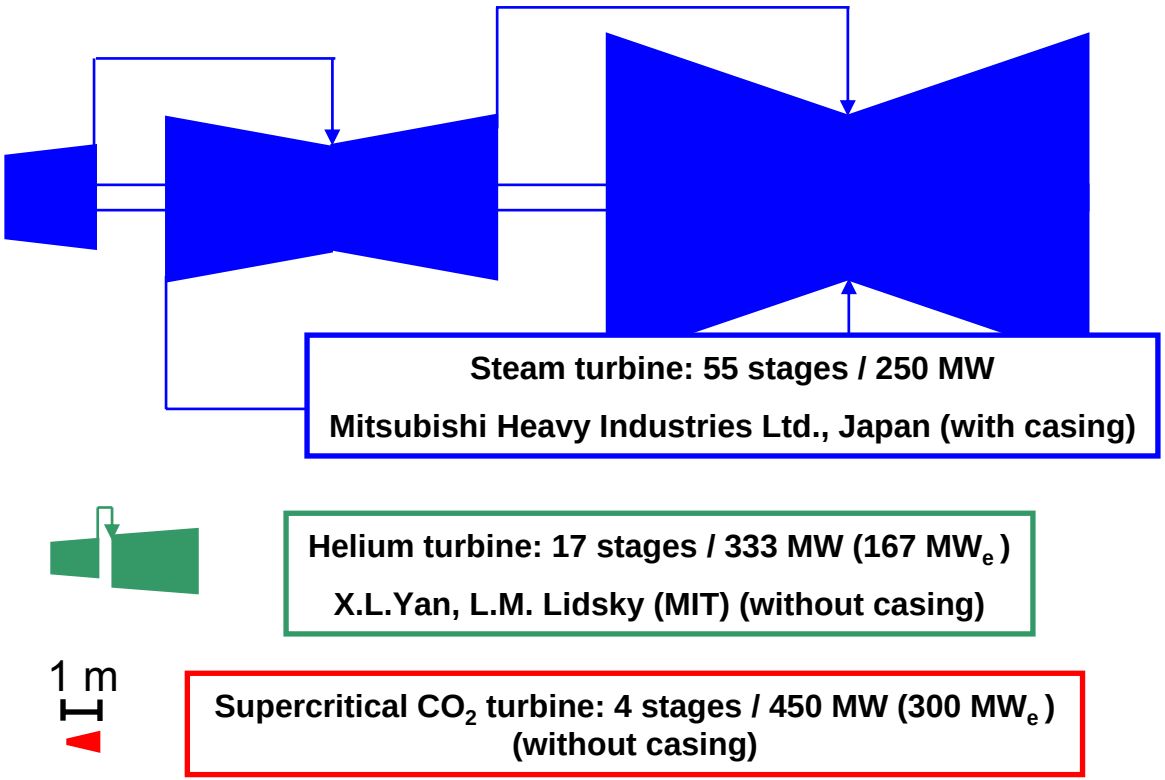

GT-MHR and S-CO_2 Integral-Configuration PCUs

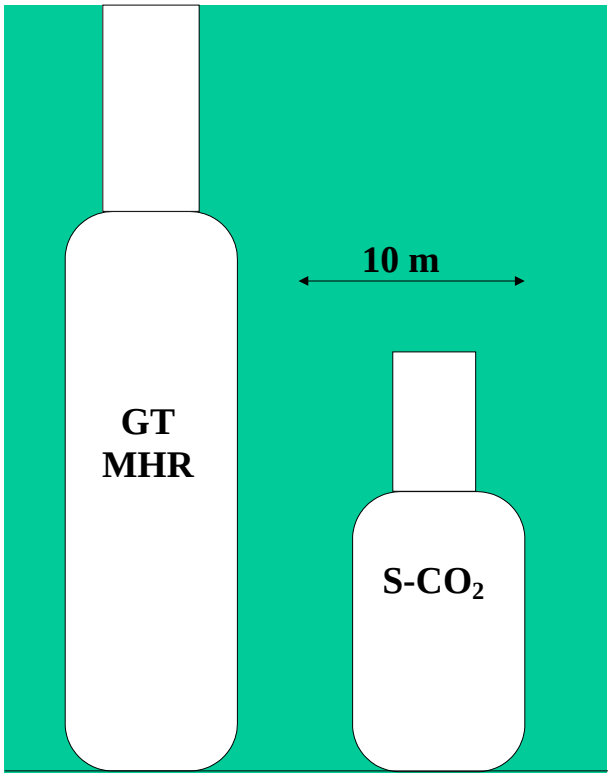

FY03 ACCOMPLISHMENTS – S-CO2

S-CO2 efficiency at 550 C in range of supercritical of superheated Rankine cycles

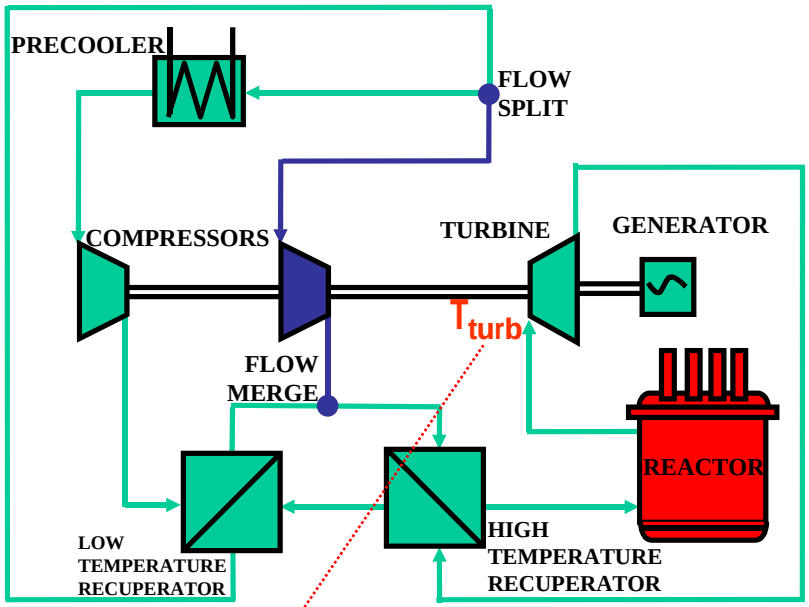

T_{turb}	$\eta_{thermal}$	η_{net}
550°C	44%	40%
650°C	51%	47%
700°C	53%	49%

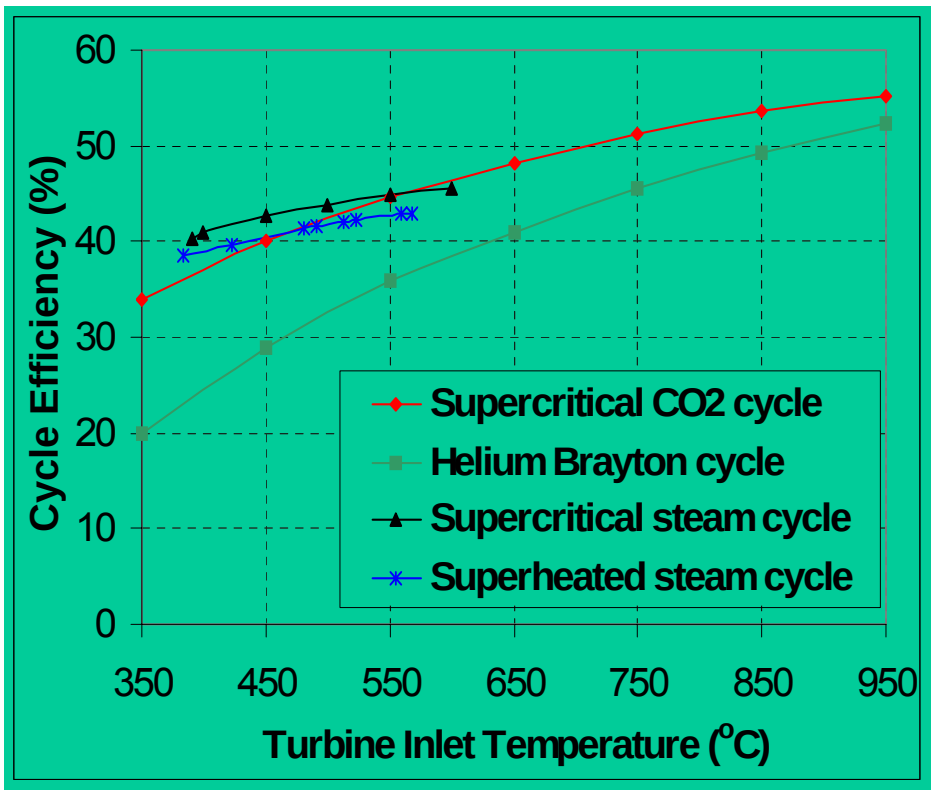

FY03 ACCOMPLISHMENTS - S-CO2

Initial investigation of the S-CO2 cycle identified attractive features for Gen IV reactors

- **Optimized cycle is <u>simple</u>:**
  - Intercooling or reheat not beneficial, not used
  - Single shaft configuration is applicable
  - <u>Compact</u>: 300 MWe turbo-machinery ~ 1m dia., 3-6 Stages Long
  - <u>High</u> Thermal (and Net) <u>Efficiency</u>

- Basic Design:	550°C	44%	(40%)
- Advanced Design:	650°C	51%	(47%)
- Future Design:	700°C	53%	(49%)

  - Turbomachinery is more efficient than helium counterparts
- Recuperators, precoolers and IHXs can be based on PCHE (Heatric™)

FY03 ACCOMPLISHMENTS - S-CO2

Technical challenges for the S-CO2 cycle have been identified

- Higher Pressure (20 MPa) than He Brayton (7-10 MPa) (Less than supercritical steam fossil @ 25-28 MPa)
- Optimizes at modest ΔT across heat source (150°C)
  - **Requires highly efficient recuperation (Heatric™ PCHE Units)**
- Requires attention to precooler & heat sink design because compressor is near CO_2 critical point (≈31°C)
- Recompression cycle requires two compressors, two recuperators
- Conventional inventory control impractical.
  - **Two compressors in Parallel (Best in base-load mode; alternatives - use of TM with variable blade angles)**
- Lack of industrial experience with high throughput axial compressors for CO_2 near its critical point (31°C, 7.3 MPa)

WORK IN PROGRESS FOR FY04 - S-CO2

- **Supercritical CO_2 cycle**
  - Turbine – compressor design studies
  - Thermodynamic and component optimization
  - Preliminary S-CO_2 cycle economic analysis
  - Simulation model for S-CO2 system dynamic response
  - Evaluation of PCHE heat exchanger for S-CO2 system
  - Analysis to support design of small scale S-CO2 demonstration experiment. Component and system experiments to validate design models.

WORK IN PROGRESS FOR FY04 - S-CO2

Important near-term research objectives for S-CO2

- Complete TM design code improvements (near-critical-point pluids)
- Define minimum size scalable axial compressor experiment –to confirm theoretical analyses
- Initiate experiments on test PCHE unit - confirm PCHE HX analysis
- Engineering aspects:
  - **Design of intra-stage seals**
  - **Design of shaft seal for coupling TM and separate generator**
  - **Details of turbine, compressor inlet and exit ducting**
  - **Details of component layout for an indirect cycle**
  - **Confirmatory corrosion studies (at high P, T, with radiolysis)**
- More detailed economic comparisons for indirect cycles

WORK IN PROGRESS FOR FY04 - S-CO2

Initial economic analysis for S-CO2 direct cycle indicates 20 % lower capital cost than steam cycle

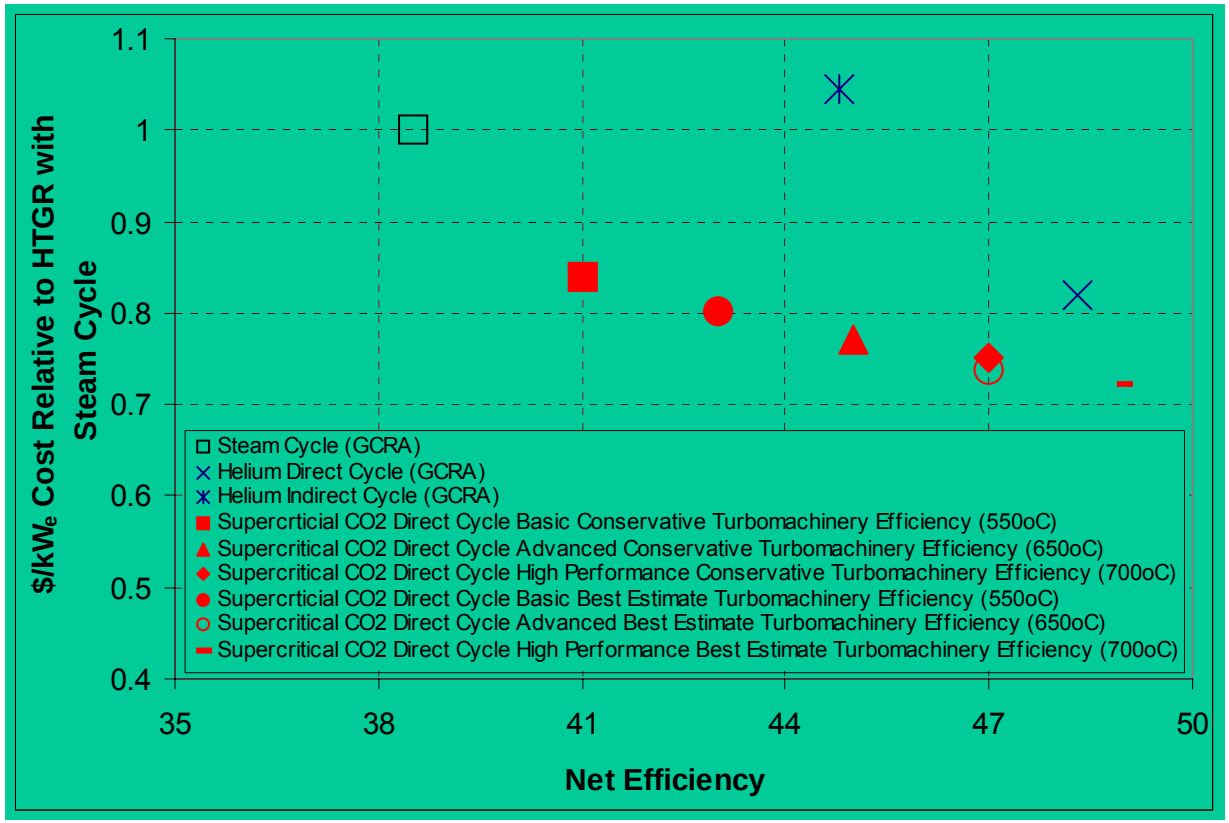

PLANS FOR FY05-07 - S-CO2

- **Supercritical CO_2 cycle**
  - Complete system design, economic assessment for 300 MW_e CO_2 plant
  - Engineering – seals, ducting, materials, heat exchangers
  - Supercritical CO_2 Brayton demonstration experiment
    - Smallest viable demonstration experiment that represents key SC-CO2 characteristics
    - Validate key features of SC CO_2 cycle operation and performance
    - Design FY05, fabricate FY06 and FY07 (Target Budget)
  - Complete simulation model for S-CO2 system dynamic response
  - Confirm PCHE HX analysis with experiments on test PCHE unit

GEN IV ENERGY CONVERSION RESEARCH AREA INCLUDES

- **Evaluation of potential efficiency improvements for high-temperature He Brayton cycles (SNL)**
  - **Identify options for potential efficiency increase (FY03-04)**
  - **Preliminary analysis of cycle performance potential (FY03- 04)**
  - **Preliminary cost estimates for improved efficiency configurations (FY04)**
  - **Conceptual and engineering system design (FY05-07)**
  - **Small scale component and system demonstration experiments (FY07-)**

GEN IV ENERGY CONVERSION RESEARCH AREA INCLUDES

High-Temperature He Brayton cycle options study (SNL)

- Brayton Cycle Efficiency Improvement Options
  - **Inter-stage heating (IH)/cooling (IC),**
  - **Working fluids (He, N2, CO2),**
  - **Bottoming cycles,**
  - **Split flow (recompression) configurations**
  - **Estimate performance improvement**
- Preliminary Cost Estimates
  - **Define component requirements for configuration**
  - **Preliminary cost estimates based on scaling algorithm**

Recuperated Brayton Cycle

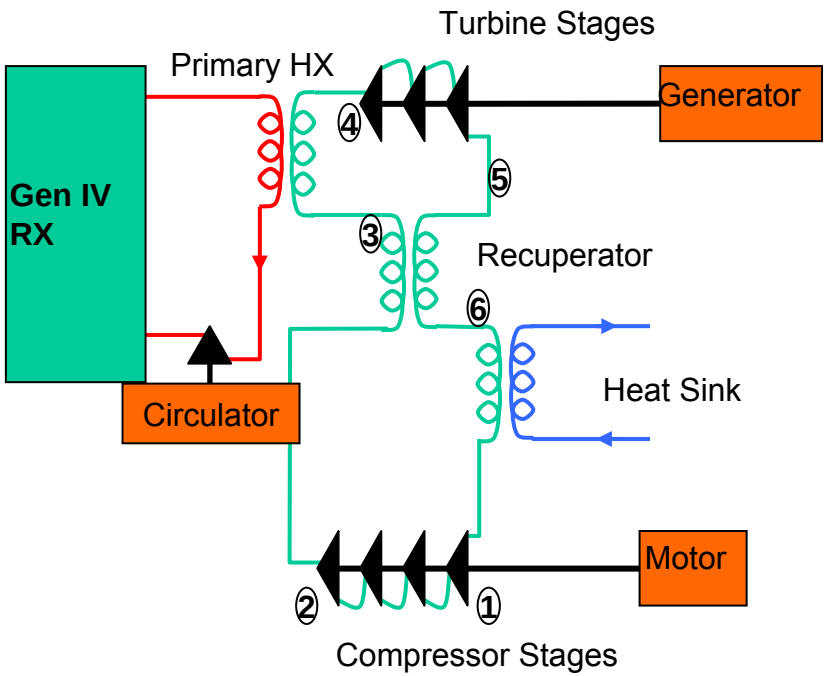

FY03 ACCOMPLISHMENTS

Options examined for Brayton cycle efficiency improvement – interstage heating,cooling

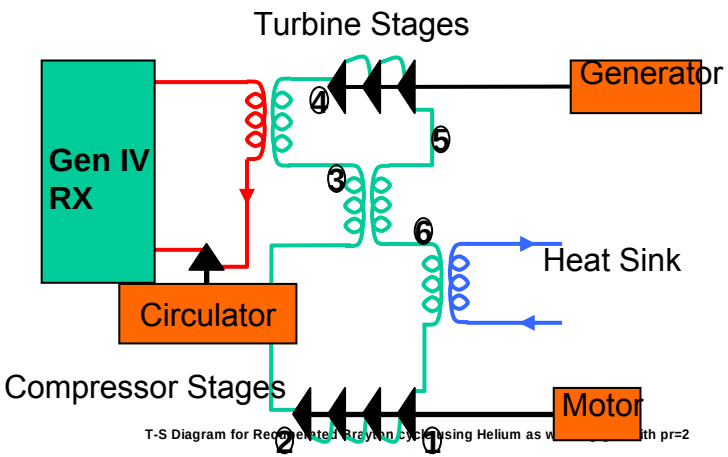

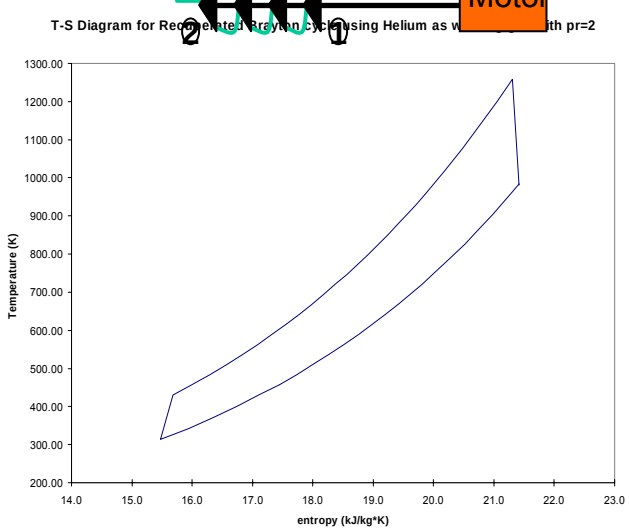

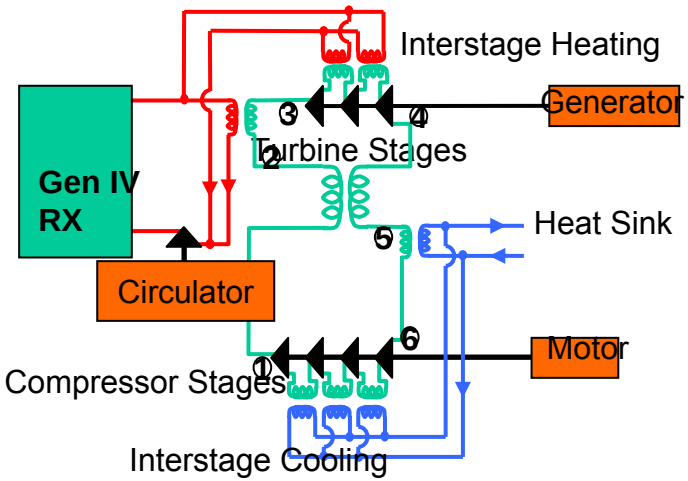

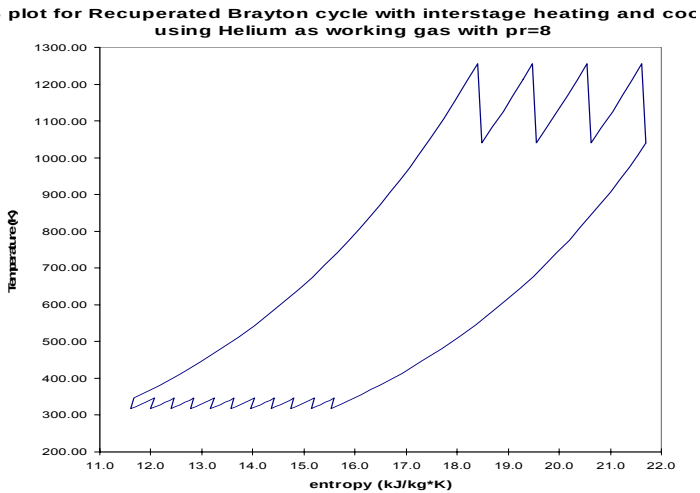

FY03 ACCOMPLISHMENTS

Brayton Cycle with Steam Rankine Bottoming Cycle

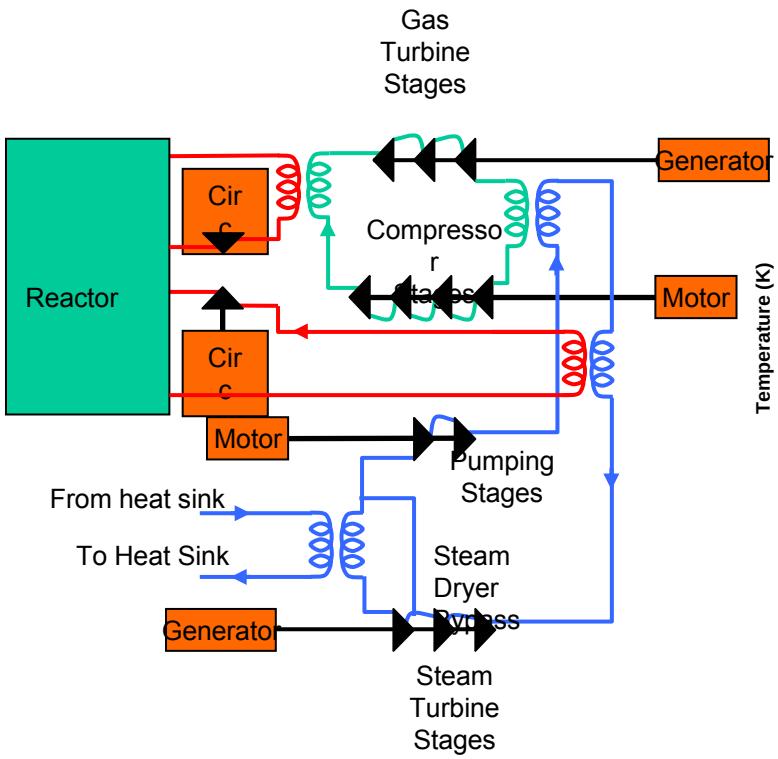

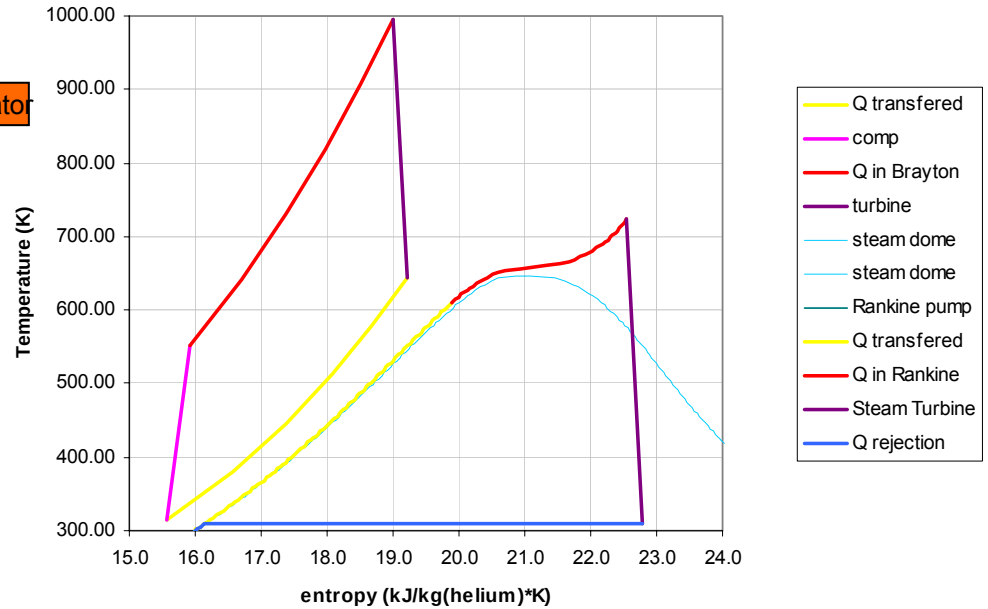

Figure 11: T-s plot for simple Brayton cycle using Helium flow at 6.9 and 23 MPa with SC steam bottoming cycle with mass flow ratio of 1.241 water/helium (eff=48%)

FY03 ACCOMPLISHMENTS

Recuperated Brayton Cycle with Split Flow (Recompression)

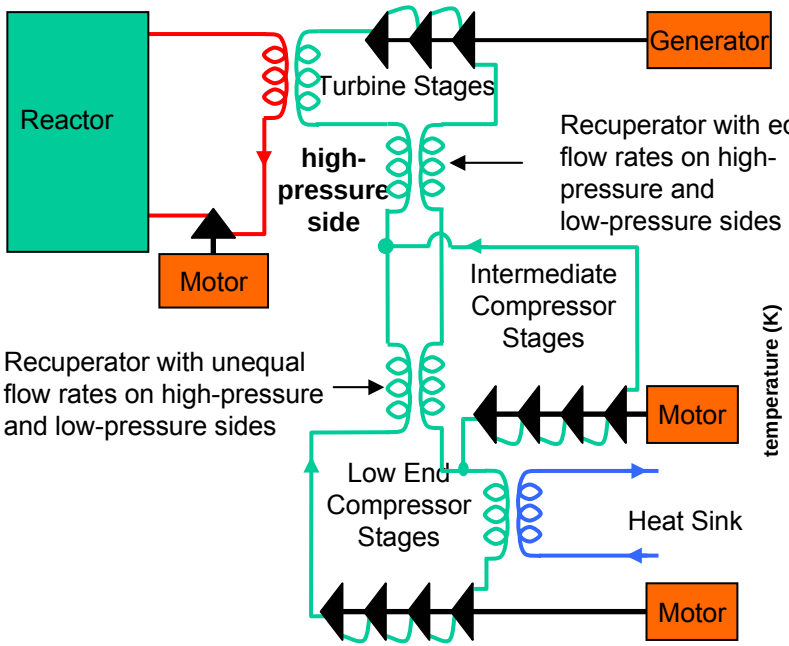

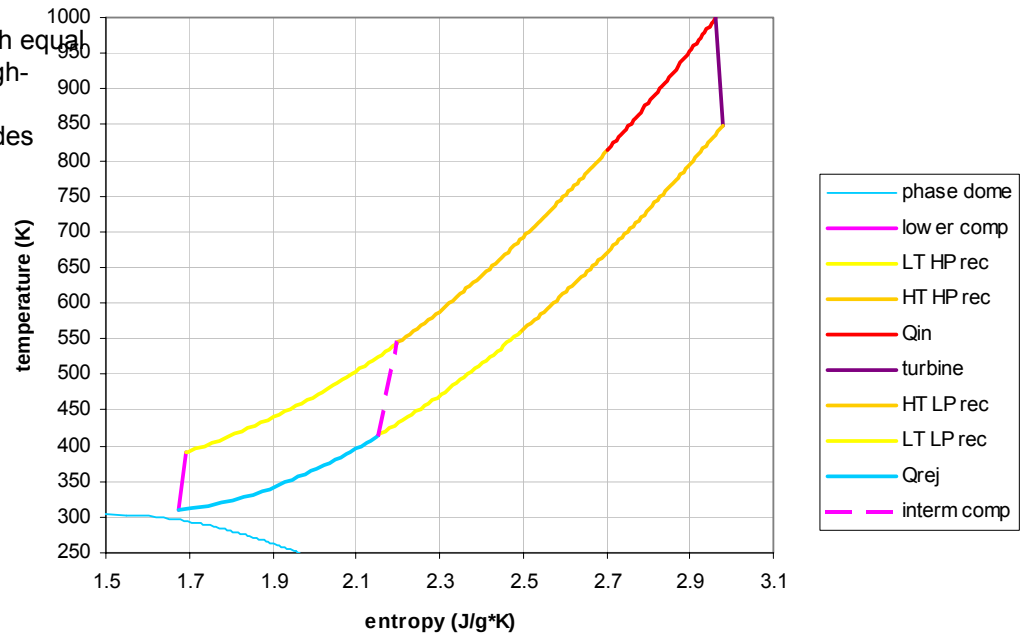

Figure 13: T-s diagram for split flow recuperated Brayton cycle using CO_2 beween 7.5 and 22.5 MPa with 29% of the flow diverted by the intermediate compressor (eff=49%)

WORK IN PROGRESS FOR FY04

Comparison of options for Brayton cycle efficiency increase and TM operating conditions.

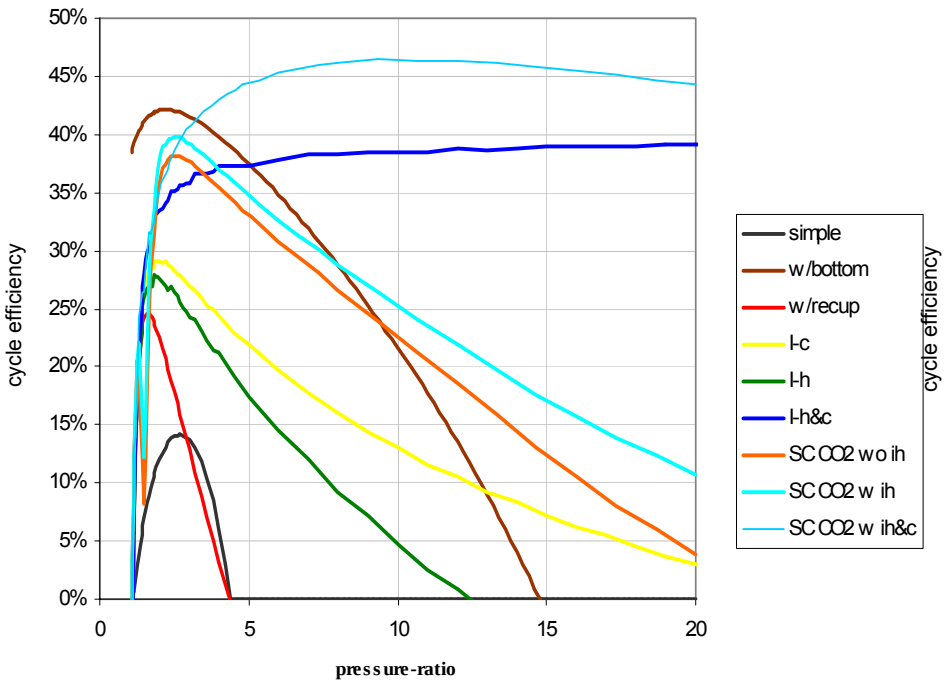

Figure 23: Brayton Cycle Efficiencies vs Pressure-Ratio for Thermodynamic Cycles Operating at 450ºC

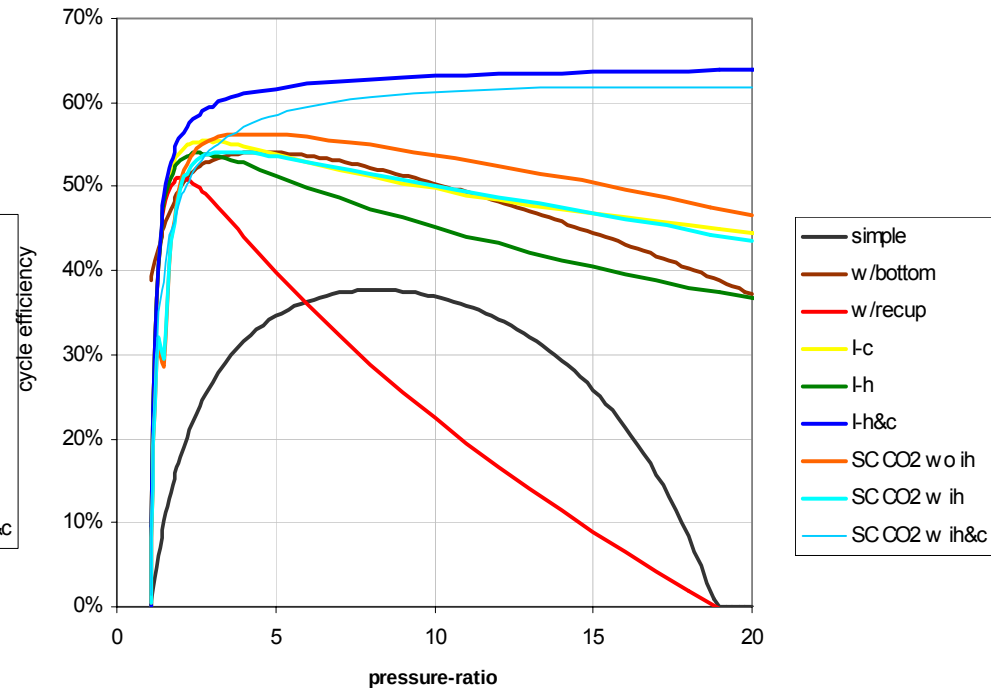

Figure 26: Brayton Cycle Efficiencies vs Pressure-Ratio for Thermodynamic Cycles Operating at 1000ºC

WORK IN PROGRESS FOR FY04

Comparison of efficiency increase for Brayton cycle configurations

- Potential thermal efficiency improvement
  - **~ 42% at 500 C**
  - **~ 25% at 1000 C**
  - **Bottoming cycles – similar improvement at low temperatures**
- SC CO2 similar to IH/IC or combined cycle at low temperatures – but simpler, cheaper

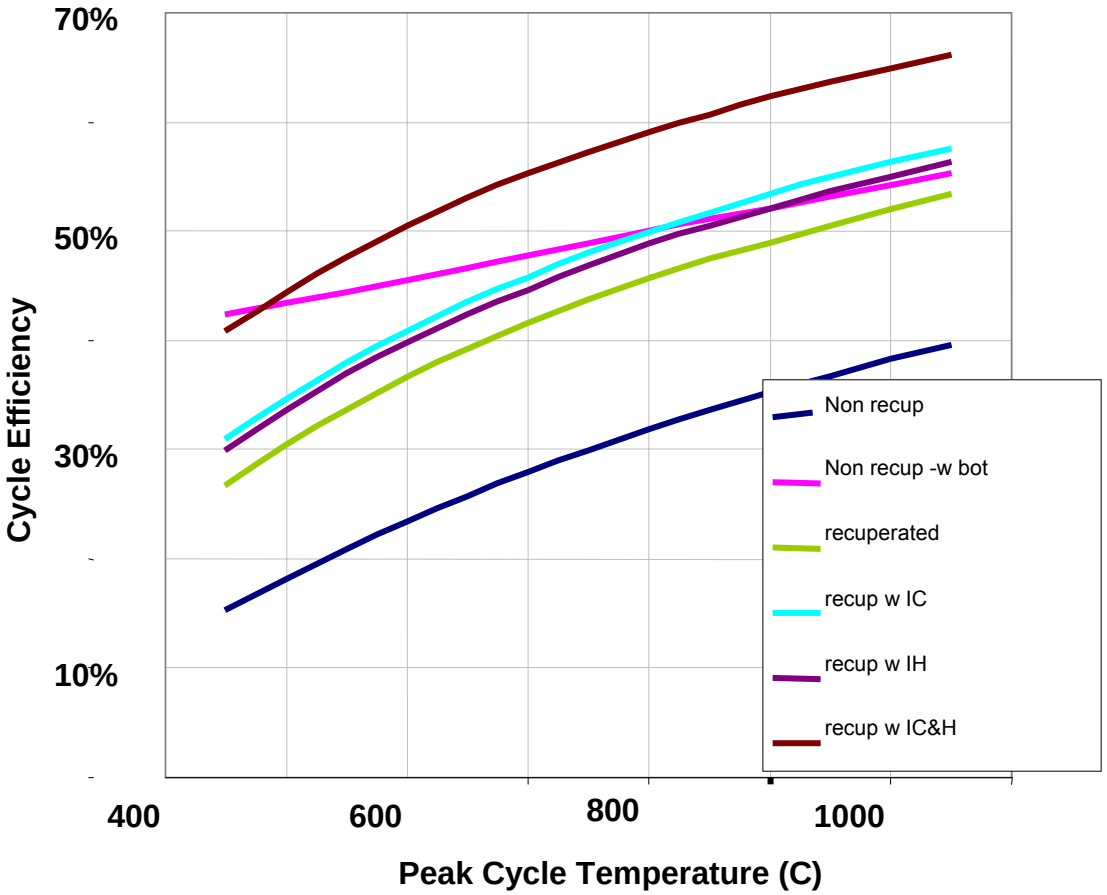

WORK IN PROGRESS FOR FY04

NGNP power conversion system requirements and options assessment to support NGNP power conversion design studies

- **Preliminary analysis for:**
  - **Direct and Indirect cycle options, single and multiple shaft turbomachinery, conversion side IHX requirements**
  - **Preliminary turbine/compressor considerations and specifications, margins, assembly dynamics, casing loads & thermal distortion, bearing technology assessments**
  - **Deliverable – initial evaluation of NGNP power conversion technology options, issues, requirements**

PLANS FOR FY05-07

Next steps for evaluation of Brayton cycle options

- **Complete capital cost impact scoping analysis (FY05)**
  - Incremental costs (HX's/recuperators,TM, BOP/generator)
  - Cycle optimization analysis
  - Innovative HX approaches to mitigate costs
- **Engineering analysis to confirm design, performance, costs with Industry (FY06)**
- **Small scale demonstration experiment (components, scaled system) (FY07-)**
  - TM design, HX design, validate key features

PLANS FOR FY05-07 - SUMMARY

Major Activities

- Complete design of S-CO2 ~300 MWe plant,
- Construct perform scaled demo (~0.1? MWth)
- Advanced Brayton cycle engineering, scaled experiment design

- S-CO2 design small scale demo experiment
- Advanced Brayton engineering design

- S-CO2 – fabricate components
- Adv Brayton – analysis and cost assessment

- S-CO2 – component fabrication
- Adv Brayton scaled experiment analysis

- S-CO2 --demo exps, initiate engr demo design
- Adv Brayton demo experiment design

- S-CO2 –Initiate SC-CO2 scaled exps
- Adv Brayton component fabrication

FY2005 - 0.6M	FY2006 - 0.6M	FY2007-1.0M	FY2008-1.3M	FY2009-1.5M

BUDGETS FY03-04

Energy Conversion Tasks	Organizations	FY2004 Budget	FY2003 (CYO)
Supercritical CO2 Cycle*	MIT	170	106
Advanced Brayton Cycle Studies	SNL	40	81
NGNP Technology Options Assessment	SNL/INEEL	330	
Project Coordination	SNL	60	
Total		600	187

* Project Start- 3Q 2003