ADVANCED REACTOR, FUEL CYCLE, AND ENERGY PRODUCTS WORKSHOP FOR UNIVERSITIES

Dr. Mike Cappiello

Lead-Alloy Liquid-Metal-Cooled Fast Reactor

Los Alamos National Laboratory

Workshop for Universities
Hilton Hotel, Gaithersburg, MD
March 4, 2004

Lead-cooled Fast Reactor Program

- **Objective is small nuclear energy system for deployment in remote locations and in developing countries**
- **Desired attributes include**
  - proliferation resistance through long core lifetime, passive safety, modular factory construction, semi-autonomous load following
- **R&D elements are directed toward definition of the reference system and then selected to provide design information**
- **Design and R&D will be focused by preparation of a defendable safety case for the reactor system, which be subsequently used in licensing**
- **Envisioned licensing approach includes licensing through testing of a demonstration unit**

Basis for Small Modular Reactor focus of LFR: addressing regional power needs

- **Developing Countries are the next Major Electric Power Growth Area**
- **Developing Countries will Look to Developed Countries for Solutions, specifically, they will look to Russia, Japan, France, and the U.S.**
- **They will Need:**
  - Small increments of electric power (10-50 Mwe) on distributed grids
  - Simple controls, passively safe and low maintenance power plants
  - Reliability in power availability over long periods of time
  - Stability in the price of electricity and low investment risk
- **Small, low maintenance systems will also be beneficial to remote locations in the US and elsewhere (e.g., Alaska, Hawaii, Japan)**
- **Improved grid reliability using distributed power sources will also benefit from the availability of small, robust systems**

Small Liquid Metal Cooled Fast Reactors are Proposed for a Specific Market Need

Small modular reactors are being developed through the DOE Generation IV Program

VISION:

The vision of the LFR program is the future commercial deployment of advanced small reactors (10-100MWe), which are highly proliferation resistant (with no on-site storage or handling of fuel), employ sealed reactor cores with lifetimes of up to 30 years, are economic and simple to operate, and are deployable virtually anywhere in the world.

MISSION:

The mission of the LFR program is to research, design, develop and demonstrate an advanced small reactor that is safe, secure, transportable and highly proliferation resistant, such that the concept is prepared for commercialization by 2025.

The impact of successfully completing this mission will be the commercial deployment of a new type of small, proliferation resistant reactors

Several key elements that provide enhanced proliferation resistance are targeted

- Sealed core: no on-site refueling
- Transportability: entire core and reactor vessel remain as a unit
- Long-life Core: 30 year core life is a target
- Simple integrated controls: minimum operator intervention or maintenance required
- Local and remote observability: rapid detection/response to perturbations
- Minimum industrial infrastructure required in host location
- Very small footprint requiring security

Small Liquid Metal Reactors Have Good Potential to Achieve LFR Goals

- **Advantages of Liquid Metal Reactors (LMRs)**
  - High conversion ratio and
  - High burnup fuel support long life core
- **Long life permits sealed system**
- **LMR low pressure systems support compact reactor designs with size and mass compatible with factory fabrication and transportation**
- **Large safety margins support semi-autonomous control**
- **High conversion ratios (breeding) support sustainable nuclear future**
- **The small LMR can also contribute to closing the fuel cycle, but are not intended for high transmutation rates**

The Generation IV International Forum selected LFRs as a concept for further development,and the U.S. has focused on small LFRs

Concepts of small "battery" heat source reactors of long refueling interval proposed

- **Battery Heat Source Reactors (~100 - 200 MW_{th})**
  - Long (20-year) whole core refueling interval
  - Passively Safe
    - Balance of Plant (BOP) has no safety function
    - BOP Built and Operated to normal industrial standards
- **Factory Fabrication of the Nuclear Heat Source**
  - Economy of Mass Production
  - Barge/Rail Shippable Sizing
  - Delivered turnkey to plant site
    - Rapid installation/coupling to a pre-built, non-safety grade Balance of Plant
- **Plant supported by Regional Fuel Cycle Centers**
  - Owned (potentially) by consortia of Client Users
  - Operated under International Nonproliferation Oversight
  - Providing front and back end fuel cycle services (including waste disposal) to thousands of Battery Heat Source Reactors

Small LMRs have innovative potential for attractive economics

- **Previously considered small reactor designs have not been economic - mostly due to economy-of-scale considerations that motivate use of larger plants**
- **However, innovative attributes of the small liquid metal-cooled concepts offer prospect for improved economics of smaller systems:**
  - Reduced pressurization sources allow small containment, which historically had motivated larger plant sizes
  - A long-life, sealed core serviced by a regional fuel supplier allows deployment with no associated fuel handling or fuel management infrastructure, reducing financial and licensing burdens at the plant site
  - Design for a passively safe core and primary system allows construction of a non-safety-grade balance of plant
  - Incorporation of advanced energy conversion, using supercritical CO_2 or supercritical steam, allows construction of a balance of plant with a considerably reduced footprint
  - Low primary system pressure reduces design demands on the primary system boundary
  - A primary system with enhanced natural circulation allows reduced primary pump requirements, and possibly elimination of primary pumps altogether
  - A plant system with passive thermostructural feedbacks allows incorporation of autonomous load following, reducing the complexity and operational requirements of control systems
- **These attributes, along with the economics inherent in the envisioned deployments, which are different from the economics of large, base-load deployments in the U.S., suggest that an economic small reactor system can be realized**

Design Objectives for the Small Modular LFR

- Deployable in remote locations without supporting infrastructure (output, transportation)
- High degree of proliferation resistance
- 15 to 30-yr core lifetime
- Passively safe under all conditions
- Capable of self-autonomous load following
- Natural circulation primary
- Fuel cycle flexibility
- Options for electricity, hydrogen, process heat & desalination
- Licensable through testing of demonstration plant

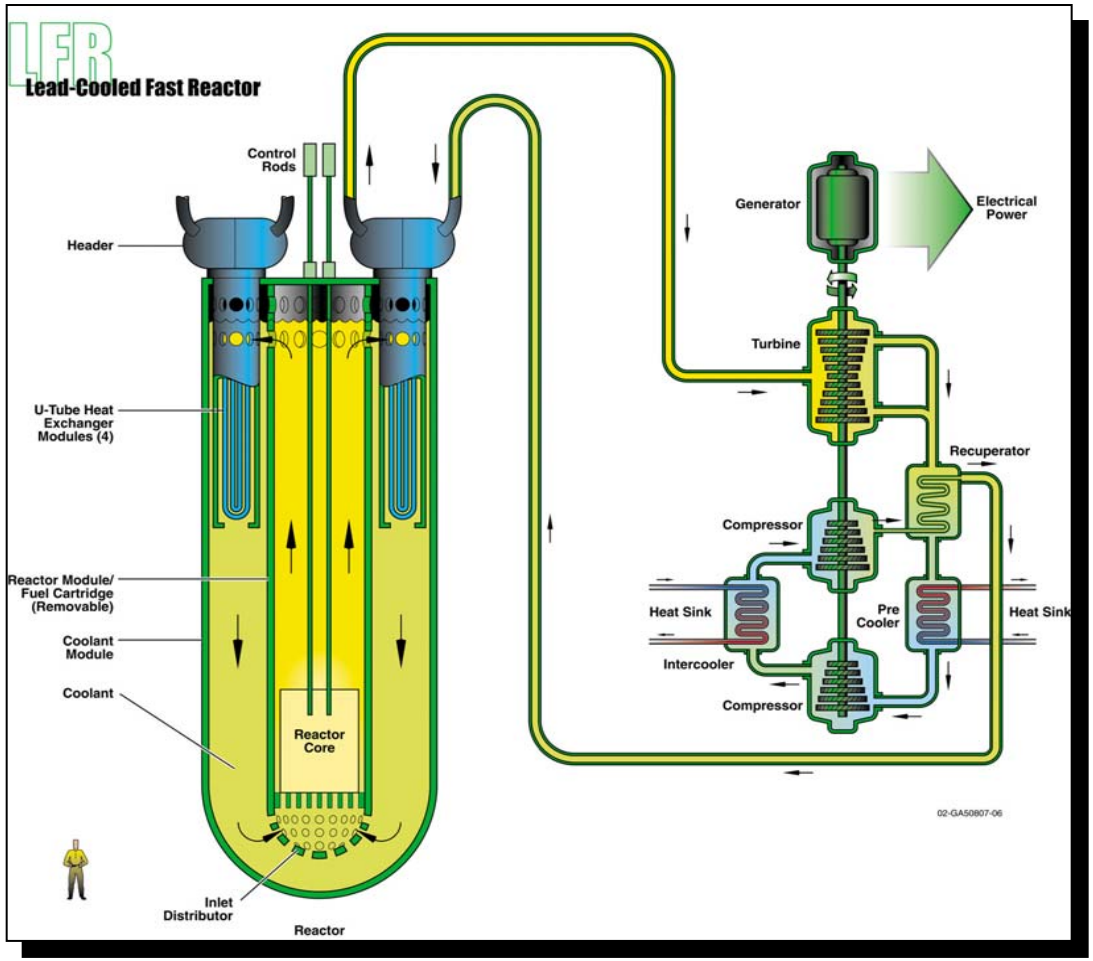

Note: Person in figure not drawn to scale

LFR Program Demonstration Objectives

- **Start-up of a demonstration facility by 2025.**
- **Operation of such a facility will demonstrate all or much of the following:**
  - Passively safe operation & autonomous load following
  - License by test, leading to design certification (as with airplanes certified by the FAA)
  - Modular reactor fabrication & assembly
  - Operation with a sealed core
  - Long-life suitability of the core and primary system components

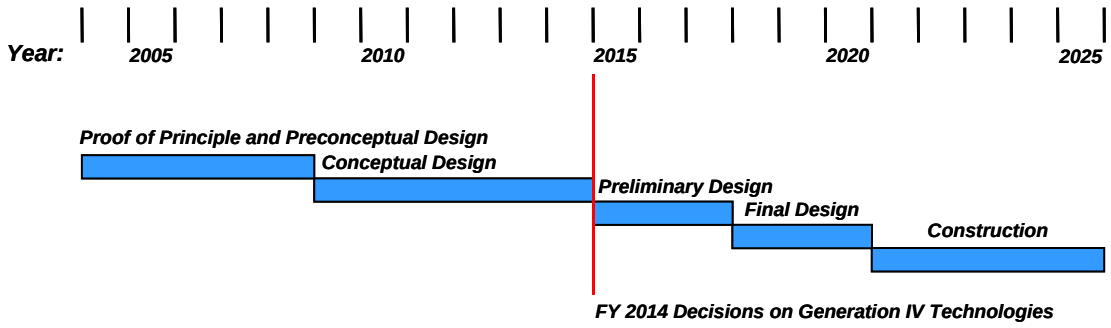

Why lead or lead-bismith: some basic characteristics of liquid metal coolants

Coolant	Melting Point (°C)	Boiling Point (°C)	Chemical Reactivity (w/Air and Water)
Lead-Bismuth Eutectic (Pb-Bi or LBE)	125	1670	Inert
Lead (Pb)	327	1737	Inert
Sodium (Na)	98	883	Highly Reactive

Lead and Lead-Bismuth Coolants Offer Promising Overall Characteristics

Technical Challenges provide focus for needed R&D

- Material Compatibility – Pb-Bi coolants are corrosive to steels and require careful chemical monitoring and control
- Coolant Activation – Pb-Bi yields radioactive Polonium (Po)
- Durability and inspection of fuel, cladding and structural components
- Reactor Coolant constraints (e.g., minimum temperatures)
- Bismuth Availability May be an issue
- Advanced control concept to enhance autonomous control
- Advanced siting/licensing approach

Background history on lead-bismuth reactors & current research

Russia - Mid 1960's to 1990

- Built and operated 7 “Alpha Class” Submarines (Approx. 60 Mwe)
- Built 2 on shore prototypes
- Ongoing work on ADS systems

Germany - 2000 to Date

- FZK has constructed 3 experimental test loops using Lead-Bismuth

Japan - Late 1990's to Date

- Built experimental test loop
- Toshiba concept of a Pb-Bi cooled 4S reactor

Sweden - 2003

- Royal Institute of Technology just complete large Lead-Bismuth Experimental Loop

U.S. Programs - 2000 to Date

- Los Alamos National Laboratory - Delta Loop Fully Operation in FY 2003; corrosion testing
- University of Nevada at Las Vegas - Lead-Bismuth Loop Under Construction
- MIT - alloy studies to mitigate corrosion
- LLNL/ANL/LANL - STAR and SSTAR initiatives
- UCB/ANL/LLNL - ENHS

The U.S. and Japan are each developing small LMR concepts

- **Japan has developed the 4S concept, based on extensions of passive safety and metal fuel technology, for small-reactor deployments**
- **The U.S. DOE has funded smaller efforts to develop lead-cooled fast reactor concepts for similar deployments**
  - National laboratory LDRD projects
  - NERI and I-NERI projects
  - More recently, Generation IV LFR
- **Japanese and U.S. personnel have collaborated on various aspects of small LMR design, and are able to propose a collaborative program for development and demonstration**

Japanese collaborator (CRIEPI) and Toshiba have developed the 4S reactor design

- **Inherent safety features are robust**
  - All reactivity feedback coefficients including coolant void reactivity are negative
  - Fully passive decay heat removal system
- **Economic potential needs to be confirmed**
- **Achieving long life and sealed core objectives may depend on selection of coolant, sodium or heavy metal**
- **Origin of ENHS & SSTAR concepts but does not emphasize security features**

REACTOR ASSEMBLY

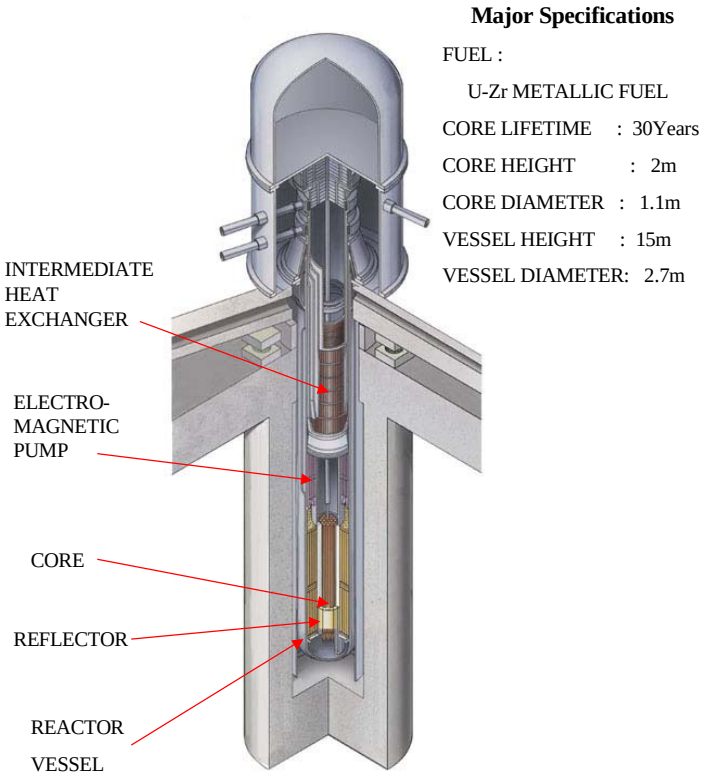

Super Safe, Small and Simple Nuclear Plant

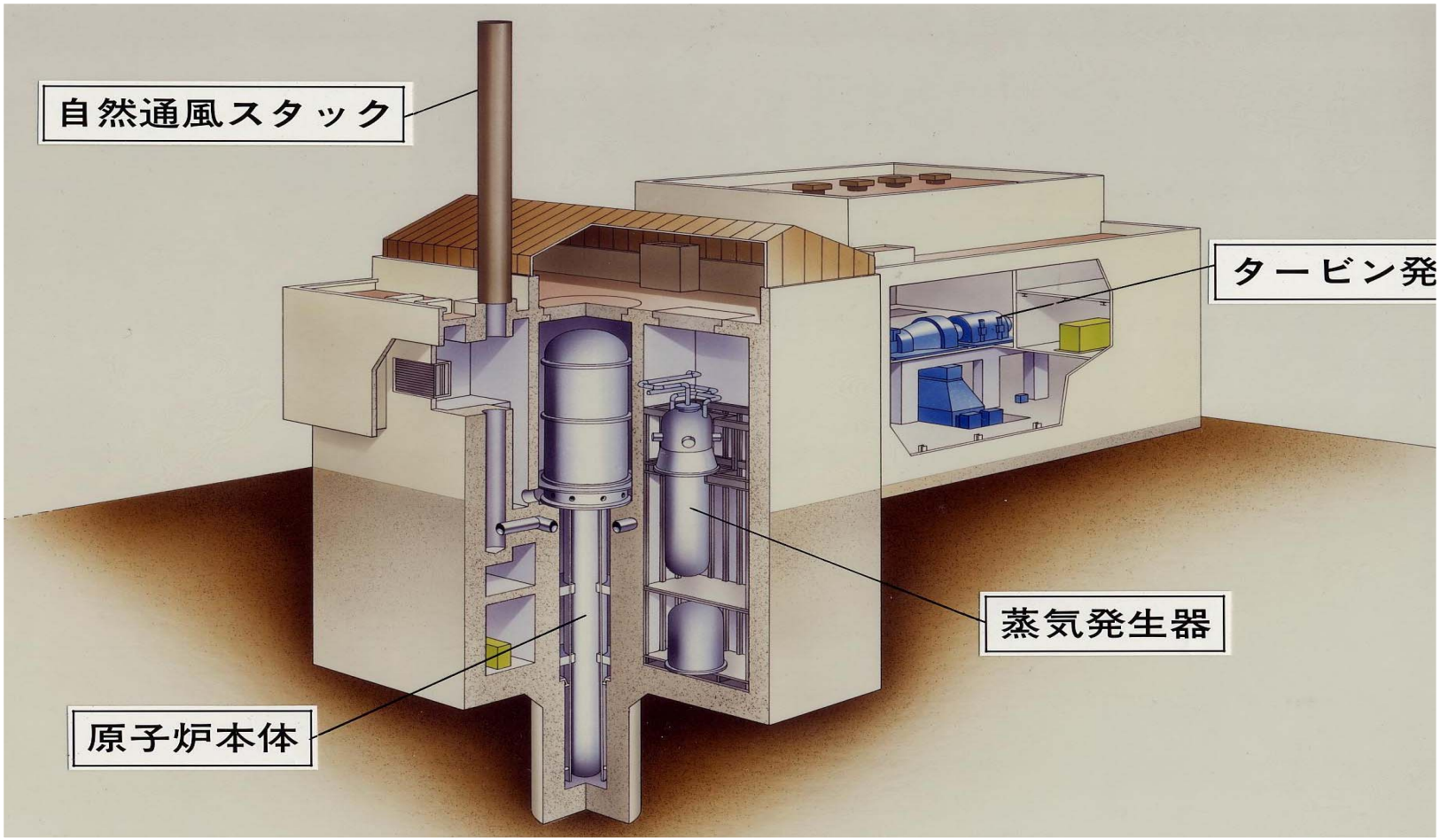

Disclaimer: We are not responsible for whatever is written in those labels.

4S reactor operating parameters are similar to other fast reactor systems

Specifications

Thermal Power, MW	125
Electrical power, MW	50
Primary Sodium Inlet Temp., C	355
Primary Sodium Outlet Temp., C	510
Secondary Sodium Inlet Temp.,C	475
Secondary Sodium Outlet Temp.,C	310
Primary Flow, m^3/min	44
Secondary Flow, m^3/min	41
Steam pressure, Mpa	10.8
Steam Temp.,C	453
Total mass, metric ton	250

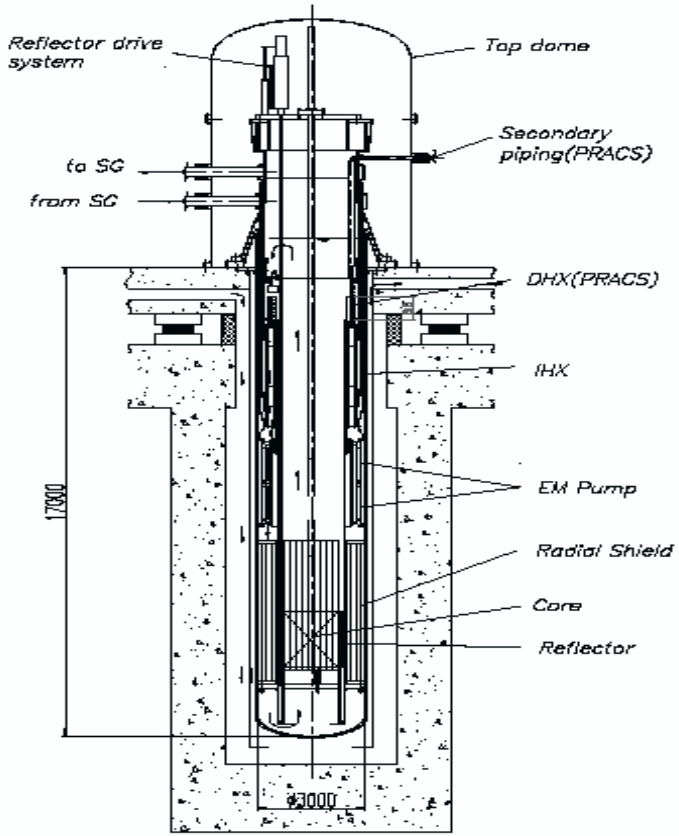

UC Berkeley, LLNL, ANL and Westinghouse developed STAR-ENHS innovative concept

- 3-year NERI study with UCB, ANL, Westinghouse, KAIST and CRIEPI completed in FY02
- Evolutionary concept developed from CRIEPI-Toshiba 4S reactor
- Natural circulation cooling
- Reactor core heat transferred from primary to secondary Pb-Bi through capsule wall
- Fuel contained in capsule throughout fuel cycle
- Engineering feasibility being considered by analysis but economic feasibility remains uncertain

Schematic vertical cut through the ENHS reactor

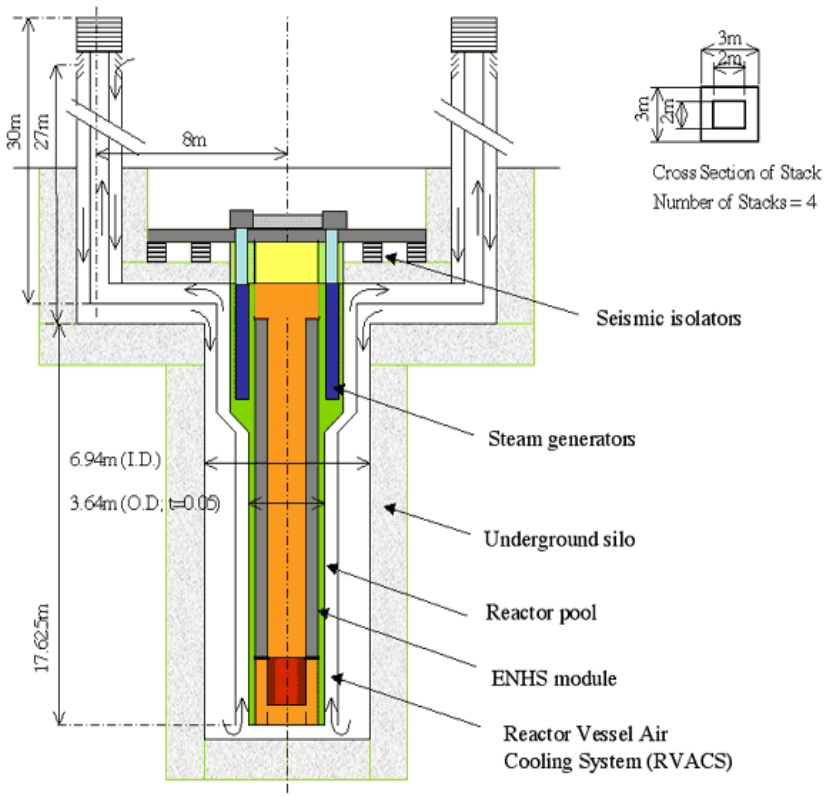

ANL is developing a SSTAR-LM concept that uses Pb or Pb-Bi coolant

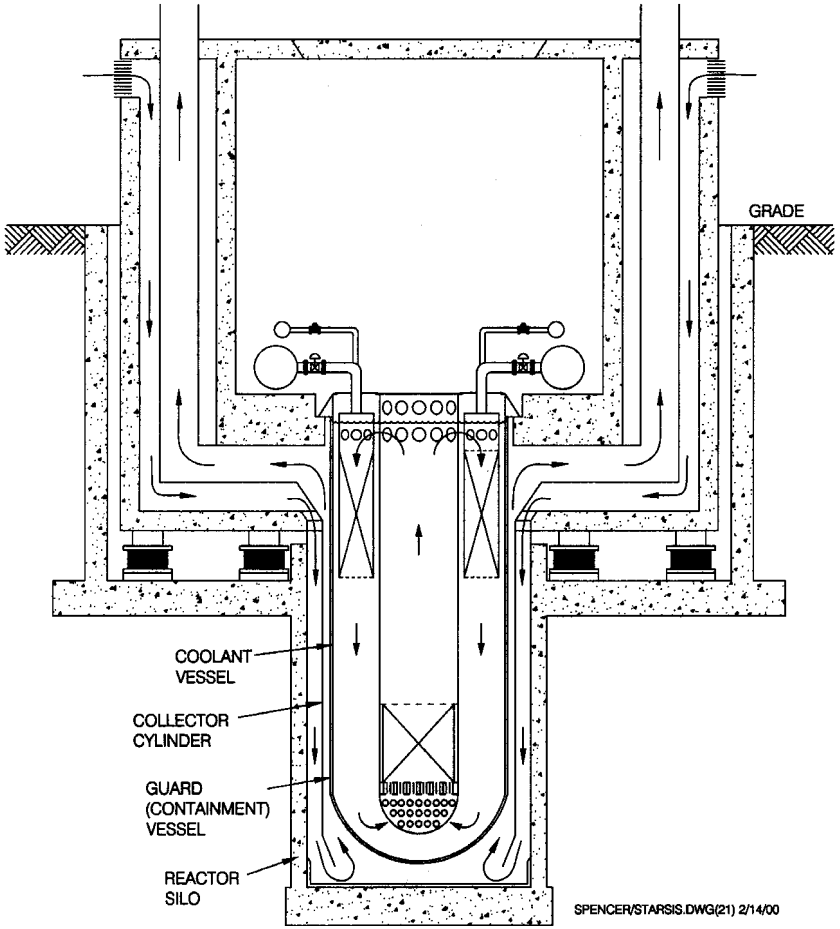

STAR-LM Features

- More conventional design than ENHS
- Natural circulation cooling
- Cartridge core design with 15–30 year cartridge life
- Core replacement storage and shipping to be developed
- Coolant and materials development required
- Cost estimates need to be developed

Organization of LFR R&D in U.S.

- **R&D elements are directed toward definition of the reference system and then selected to provide design information**
- **Design and R&D will be focused by preparation of a defendable safety case for the reactor system, which be subsequently used in licensing**

- **Reactor Design Objectives**
  - Core and heat transfer design options
    - Long-life & natural circulation
  - Safety evaluation
    - Passive response
  - Control design
    - Autonomous load following
    - Simplified mechanical design
  - Coolant properties
    - Verification of flow and heat transfer characteristics

- **Materials R&D Objectives**
  - Materials selection
    - Long-exposure times
    - Compatibility with liquid metal coolant
  - Irradiation performance
  - Database for material qualification
    - Compilation of properties
    - Demonstration of performance
    - Licensing support

U.S. LFR R&D organization (cont.)

- **Objectives for Deployment and Institutional Issues**
  - Economics & Proliferation Assessment
    - Determine requirements
    - Evaluate design options
  - Licensing Strategy
  - Scope of International Cooperation
- **Coolant Technology Objectives**
  - Establish techniques to monitor coolant chemistry & flow
  - Chemistry control
- **Fuel Technology Objectives**
  - Fuel selection
    - Long-life requirements
    - Fabrication & recycle
  - Fuel design
    - Enhance passive response
    - Allow long lifetime
  - Fuel development
    - As needed for application
  - Fuel qualification
    - Irradiation testing
    - Licensing support

LFR viability research tasks include the following

- **System Design & Evaluation**
  - Long-life core design
  - Thermal hydraulic design for passive safety, natural circulation, and autonomous load following
  - Flow measurement & modeling
  - Thermal hydraulic characteristics in representative geometries
- **Materials**
  - Screen/assess Pb/Pb-Bi compatibility of materials with known or anticipated acceptable irradiation performance
  - Pb/Pb-Bi coolant chemistry technology
- **Institutional and Deployment Issues**
  - Economic and deployment and analysis
  - Safety & licensing approach
  - Non-proliferation requirements & assessment
- **Fuel**
  - Fuel type selection and design for long-life

FY03 ACCOMPLISHMENTS

- **Reactor Design & Coolant Technology**
  - Determined LFR attributes and recommend priorities for LFR R&D
  - Sealed-core reactor issues framework established
  - Prepared LFR R&D plan
- **Materials**
  - Draft a materials needs document
  - Draft an irradiation testing needs document
  - Materials Screening Tests
    - Corrosion testing of MA957 ODS and SiC-SiC at 800°C in lead
    - Corrosion testing of ODS and V-4Cr-4Ti at 550°C in LBE
- **Institutional & Deployment Issues**
  - Started formulating licensing and safety approach
  - Economic studies initiated

WORK IN PROGRESS FOR FY04

- **Focal point for FY04: Update LFR 10-Year Program Plan Draft, with**
- **Preconceptual trade studies**
  - Core design scoping studies
  - Thermalhydraulic design
  - Fuel form design studies
  - ± of SCO_2 Brayton cycle conversion
- **Deployment and institutional studies**
  - Mission/market evaluation
  - Evaluate Licensing and Safety Approach
- **Draft system requirements**

WORK IN PROGRESS FOR FY04 (cont.)

- **Coolant Technology**
  - Operate DELTA loop; report on operation and experiment
  - First ultrasonic Doppler velocimetry measurement of LBE flow in DELTA
  - Prepare coolant technology development plan (including Pb vs. Pb-Bi considerations
- **Materials Technology**
  - Evaluate use of material coatings
  - Analyze samples from and report on results of DELTA loop 1000-hr test @ 440°C
  - Analyze samples from and prepare interim report on results of DELTA loop ≤ 500-hr test @ 550°C
    - Including surface-modified and ion-implanted samples
    - (Note synergism w/ AFCI workscope and funding)
  - Input to LFR Material Selection and Qualification Plan

Interim results of design trade-off studies

- **Evalution of power conversion options**
  - Significantly improved cycle efficiency (44% at 550°C turbine inlet temperature) relative to subcritical Rankine water/steam cycle
  - Reduced plant footprint due to fewer, simpler, and smaller-sized secondary side components
  - Potentially reduced capital and operating costs from radical plant simplification and elimination of costly Rankine cycle components
  - A S-CO_2 Brayton Cycle Test Facility is needed to test components at prototypic conditions and to demonstrate operation of integral cycles
- **Evaluation of dispersion fuel options showed that zero burnup reactivity swing and natural convection are possible with dispersion fuel rods or blocks. Nitride pellets in rods retained for now, however**
- **Calculational approach and parametric relationships established to facilitate further evaluation of design options and notions**

Reactor engineering concepts in early stages

- Concepts considered for reactivity enhancement, initial plant assembly, fuel loading, decay heat removal from expended cores, etc.
- Most ideas still just notional, but some are getting an airing with designers and engineers

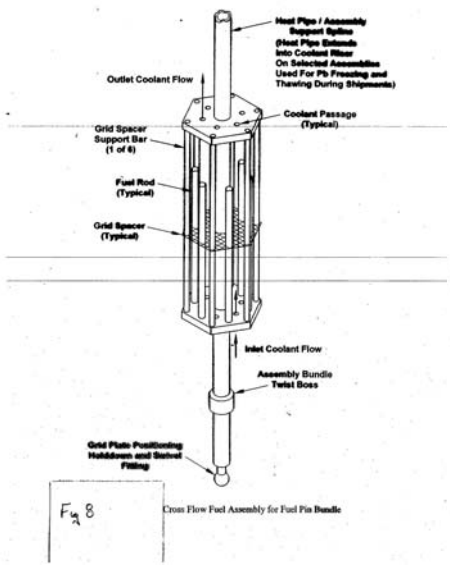

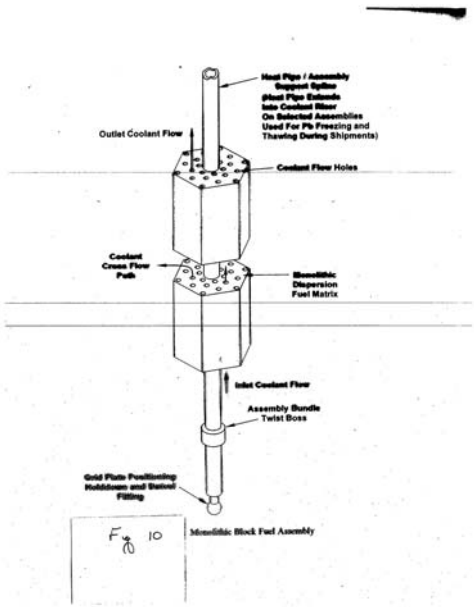

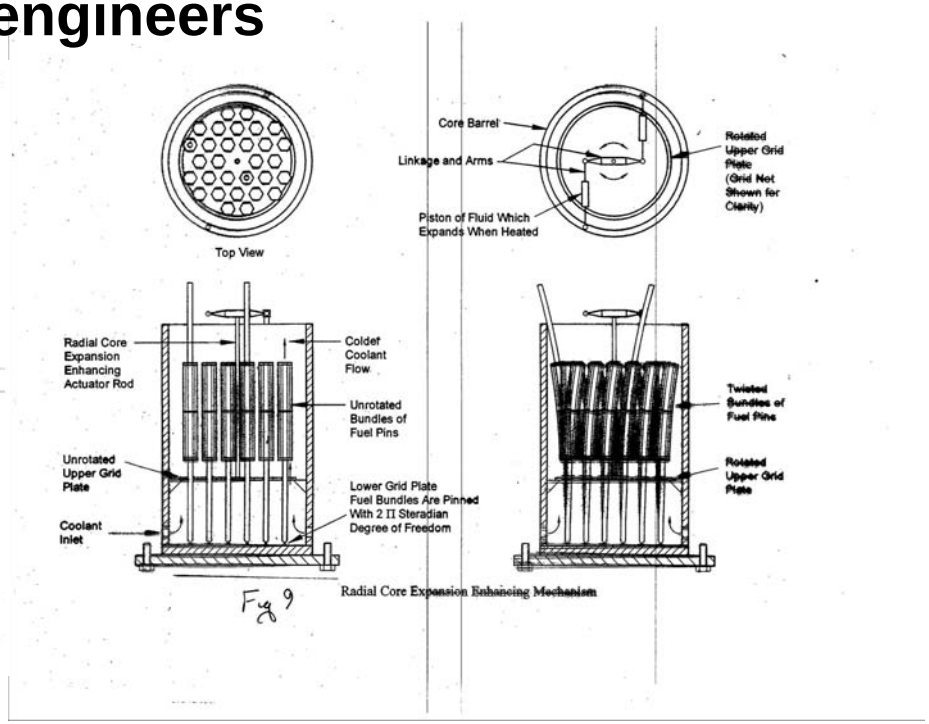

Reactor assembly and core installation concepts under early consideration

QuickTime™ and a
TIFF (LZW) decompressor
are needed to see this picture.

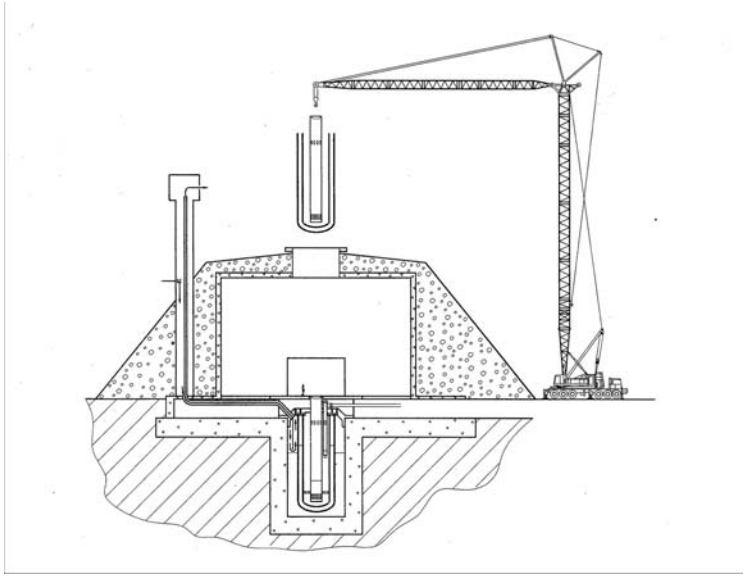

QuickTime™ and a
TIFF (LZW) decompressor
are needed to see this picture.

Selected technical highlights from DELTA loop experimental program

- Completion of 1000-hr DELTA Loop corrosion test of over 20 materials
- Development and testing of sensors (oxygen, corrosion) and flow measurement techniques
- Development and testing of coolant chemistry (oxygen) control and loop restoration
- Development and benchmarking of system corrosion kinetics models
- Characterization of protective oxide formation (incl. radiation effects)
- Compilation of Russian materials database for lead-alloys cooled nuclear systems and international LBE corrosion test results, review of fundamental issues of steels corrosion in lead-alloys

Si appears to stabilize oxide at higher Cr content

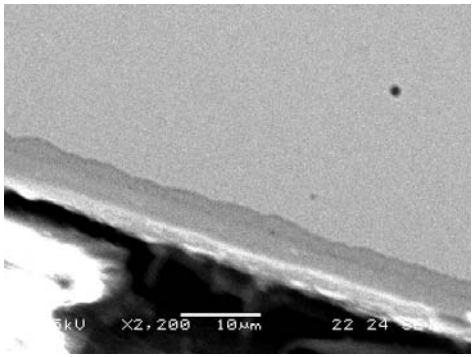

(a) 2.25%Cr-0.5%Si-Fe

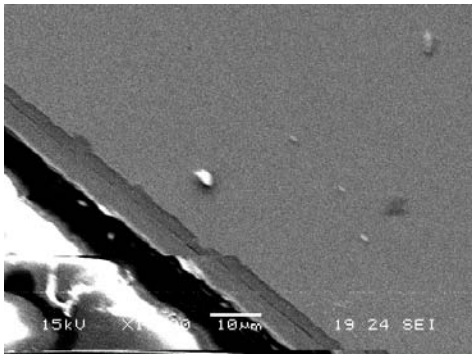

(b) 12%Cr-0.5%Si-Fe

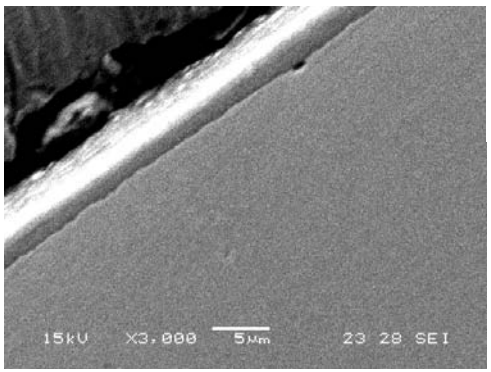

(c) 2.25%Cr-1.25%Si-Fe

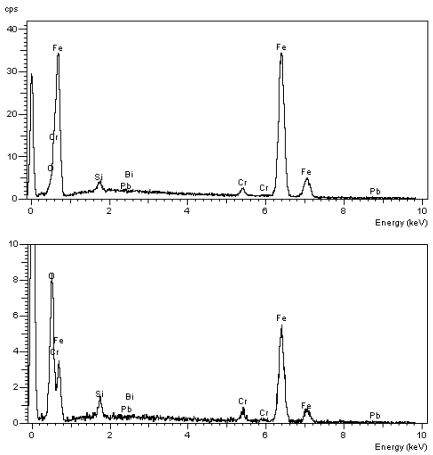

(d) EDX of steel (upper) and oxide (lower)

Figure 3. Cr-Si-Fe alloys after exposure in DELTA loop after 336 hrs, T = 450°C, v = 2 m/s. Si appears to stabilize oxide at higher Cr content.

PLANS FOR FY05-07 (shown as milestones)

- **FY05**
  - Establish point design for subsequent concept development
  - Issue document of economic requirements and proliferation-resistance principles
- **FY06**
  - Issues design and data needs document
  - Establish controllable range of oxygen content in lead/LBE
  - Update safety and licensing approach
  - Establish fuel qualification strategy
- **FY07**
  - Interim SCO_2 design requirements for LFR
  - Determine feasibility of autonomous load following concepts
  - Submit concept paper on implementation of fuel cycle centers
  - Initiate corrosion testing to assess effect of irradiation damage

Suggested subjects for university proposals

- **Deployment & Institutional Issues**
  - Economics evaluation
  - Consideration of fuel cycle centers
- **System Design & Evaluation**
  - Core design for long life and passive safety response
  - Measurement & modeling of 3-d natural circulation
  - Autonomous control design and evaluation
  - Design and evaluation for energy conversion (e.g., SCO_2 Brayton cycle, desalination, hydrogen products)

Suggested subjects for university proposals (cont.)

- **Materials**
  - Identification (or creation of materials) for Pb and Pb-Bi application
    - Existing materials; new materials; modification or engineering of materials
  - Materials characterization and screening tests through corrosion/SCC/LME testing of candidate materials.
  - Strategies for elimination of oxygen control.
- **Coolant Technology**
  - Oxygen monitoring and control strategies
  - Flow measurement techniques
  - In-service inspection techniques

Generation IV LFR for FY03 and FY04

- **FY 2003 Appropriation: $2200k**
- **FY 2004 Appropriation: 1000k**

Functional Area	Tasks	Performers	FY 2003	FY 2004
System design and evaluation	Reactor Design	ANL	619	203
		LLNL	480	167
		UC-Berkeley	70	
		Tx A&M	50	
Materials	DELTA loop operation and experimentation	LANL	396	227
	Corrosion screening tests	ANL	215	24
	Materials requirements definition	LLNL	70	60
	Project management & reserve	LLNL	250	
		LANL	50	
		TBD		319
	Total		2200	1000